

RUBBER AND POLYETHYLENE ENCLOSURES FOR OEM



Our story

GIMAX started in Italy in August 1990 in a small laboratory where electronic ballasts for fluorescent lamps at very low voltage were produced. The company developed design and production of electronic circuits with very high quality standards lodged into small enclosures. In 1991, the first range of portable and fix lamps was launched on the market. The butyl rubber was combined with unbreakable polycarbonate to give the product a robustness and compactness unknown in this sector up until then. This combination became the quality trademark of GIMAX production. Gimax has got a great experience over the years in molding thermoplastic materials, reason why the management decided to make new investments in new molds to start manufacturing an innovative solution: the power distribution boxes in hard butyl rubber. The success was immediate as the new product was placed in a competitive context characterized by the presence of electrical panels made with low quality resins that did not have any chance to compete with the intrinsic qualities of rubber. It was the beginning of the '90s when the building industry represented a thriving and extremely interesting market in Italy. The growing awareness in public opinion on security issues in workplaces and the laws to protect workers led Gimax to develop a new product range, the series ASC (Standard equipment for construction sites –











SINCE 1990 GIMAX

TÜV SÜD ISO 9001
CERTIFICATE No. 50 100 9199

TÜV SÜD ISO 14001
CERTIFICATE No. 50 100 14389

MADE IN ITALY

Industrial combinations for building yards), made in compliance with Standards CEI 17-13 / 4 (old Standard EN 60439-4 current Standard EN 61439-4). The product also aroused great interest in the shipbuilding industry where the company already supplied lighting equipment. The success increased the number of customers and expanded the offer of the company. Trolleys for electric distribution were manufactured as well as wall and portable transformers. The wide experience gained thanks to the continuous challenge of providing bespoke solutions according to specific requirements allowed the company to acquire a high level of know-how being involved in several sectors such as: industrial, railways, defense, public bodies, etc. The growth of the company was followed by the development of the sales network. New salesmen brought into the company additional inputs aimed to study new products. The development involved combinations for wall mounting and portable use.

This catalog dedicated to OEM (Original Equipment Manufacturer) lists the rubber and polyethylene enclosures manufactured with property molds in Italy. The constant technologic evolution in thermoplastic moulding found in Gimax the perfect environment so the special rubber mixture developed together with the chemical laboratories is continuosly improved in order to offer the product at best.

Our way of operating on the market and our values

From a commercial point of view, the contact with the Customer is carried out through the technical department of the Company, capable to guarantee an elevated level of competence in this field aside from a daily presence on the territory. The visit to the Customers is very important to understand how the end users work, their most frequent problems and needs.
The first step is always represented by the customer through a "consultative" approach.
The best possible solution is studied with our Technical Department composed by qualified experts in the sector. This ends up in the realisation of the final product, in most cases a product made as bespoke.

Strengths at Gimax: ability to combine high quality standards with competitive costs; modern industrial processes through new technologies; attention to detail and special needs, always trying to grant the best service. The Company is located in Pietrasanta and is dedicated to the production and assembly of electrical switchboards, lighting products and electronic circuits. The gained experience in direct contact with the end user has allowed a constant improvement in quality standards and number of produced items. Today we can grant our customers a wide offer to satisfy their needs.
The variety of the acquired experiences and a particular attention to the aftersales phase allowed GIMAX to develop new product types in line with the most recent trends. Since always, Gimax has invested great part of its resources in Research and Development activities being proud to be a leader on the market in terms of innovation capabilities. The Company has consolidated its own experience in some specific sectors:









- BUILDING SITES
- SHIPYARDS
- INDUSTRY
- REFINERIES
- PUBLIC AND PRIVATE BODIES
- DEFENCE
- FILM PRODUCTION
- MACHINE TOOLS

In these sectors, GIMAX has always been a point of reference for many leading companies for several years.

Certification and Compliance

CERTIFICATO Nr: 50 100 9199

CERTIFICATO Nr: 50 100 14389

Commitment, perseverance and dedication are the guidelines of the company to offer new solutions always respecting the most restricted Standards on domestic and foreign market.

The company management has been certified by TUV as in compliance with the following standards:

- UNI EN ISO 9001:2015 (quality)
- UNI EN ISO 14001:2015 (environment).



The Rubber series

Rubber enclosures have always been a company asset since the beginning of Gimax activity.
In fact the company has invested many resources in R&D for molds and accessories to become a market leader.
Now after many years of constant and relevant investments Gimax can offer several solutions (portable or wall mounting) with different shapes and sizes.

The offer is about electric panels, safety transformers and other power supply solutions.
Thanks to the high quality and reliability of the products, Gimax has become a well-established company in the industrial sector since 1990.

Our customers appreciate the production flexibility to meet their needs and the service of our tech-dept. We work very often side by side with our customers to help them to choose the best solution because where other cheaper plastic enclosures cannot stand the rubber is the key.
It is robust, stable (U.V. rays), shock proof, and last but not least it is a very good insulator.

Gimax provides end user solutions ready to be used, but for OEM we have a special line made of empty enclosures to be customized in your workshop.

Also accessories are important so the OEM offer is inclusive of:
Handles
Ventilation grids
Polycarbonate hinged lids (2 – 10 – 12 -18 ways)

If you have any special needs please get in touch with our commercial office.
We will be happy to put our know how at your disposal.

MADE IN ITALY



TECHNICAL FEATURES

FEATURES:
Oil and acid-resistant

Anti-ageing

Resistant to atmospheric and chemical agents. The main characteristics of solid rubber are not affected by the different temperatures (from -20° to + 80°).
High resistance to shocks and heavy uses in harsh environments. Top quality / price ratio compared to the plastic and metal panels.
Double insulation and protection degree guaranteed by special gaskets.

GLOW WIRE TEST 960°.
Self-extinguishing and lower toxicity of fumes in case of fire to allow the use of the product in public events as well.

POLYCARBONATE WINDOWS
Shock-proof with spring and axle in stainless steel AISI according to Standards IEC 529 and IEC EN 60529 suitable from 2 to 18 ways DIN. Protection degree up to IP65.

SCREWS
Anti-loss die-cast INOX fixing screws (AISI 304). Brass inserts OT58.

APPROVALS
Standards IEC 23B (SEC) 88, IEC 669-1, IEC670 1 1981.
Halogenidric gas absence. Wall solutions for building yards according to European Standards EN60439-4, (IEC 17/13-4).

Gimax is certified "ISO 9001:2015" and "ISO 14001:2015" issued by TUV ITALY.



SIGMA rubber box



Product features

Rubber box type SIGMA

- Available with hinged lid (polycarbonate) with closing spring
- Glow wire test 960° Celsius according to the following standards: CEI EN60695-2-11:2014, IEC 60695-2-11:2021
- Ral 9001
- IP54-65
- Shock resistant (IK10)
- Weight: 3,8 Kgs approx

Article	Dimensions	Modules DIN	Notes
SI00/VIT	**215 x 340 x 130 mm (W x H x D)**	**10**	Rubber box with window
SI00CC/VIT		-	Rubber box with blind cover without window

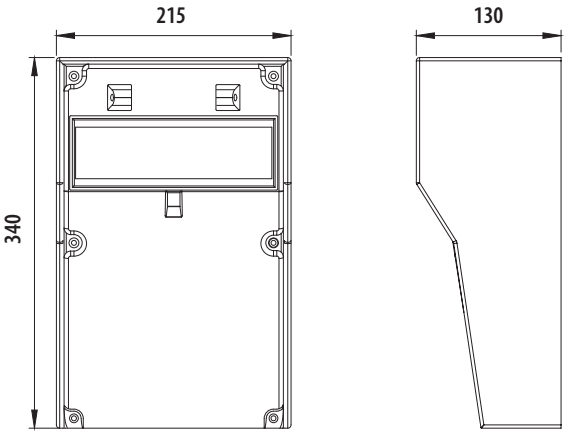

ACCESSORIES page 30

DELTA rubber box



Product features

Rubber box type DELTA

- Available with hinged lid (polycarbonate) with closing spring
- Glow wire test 960° Celsius according to the following standards: CEI EN60695-2-11:2014, IEC 60695-2-11:2021
- Ral 9001
- IP65
- Shock resistant (IK10)
- Weight: 5,2 Kgs approx

Article	Dimensions	Modules DIN	Notes
DE00/VIT	260 x 380 x 150 mm (W x H x D)	12	Rubber box with window

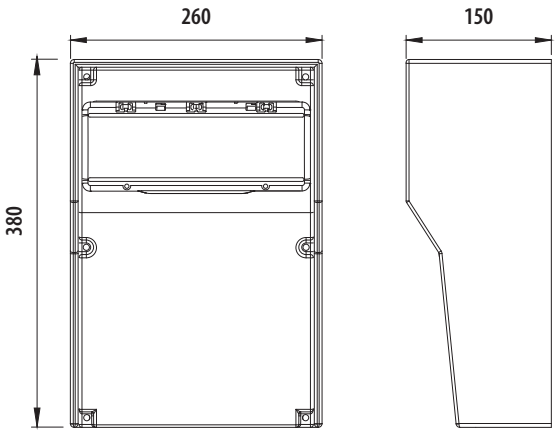

ACCESSORIES page 28

LAMBDA rubber box



Product features

Rubber box type LAMBDA

- Suitable for hinged lid up to 18 modules to be ordered separately
- Glow wire test 960° Celsius according to the following standards: CEI EN60695-2-11:2014, IEC 60695-2-11:2021
- Ral 9001
- IP54-65
- Shock resistant (IK10)
- Lambda with hinged cover available on request
- Weight: LAGXT00/VIT 8,1 Kgs - LAGX00/VIT 8,0 Kgs approx

MADE IN ITALY

Article	Dimensions	Modules DIN	Notes
LAGXT00/VIT	370 x 380 x 200 mm (W x H x D)	-	Rubber box with blind cover without window
LAGX00/VIT		-	Flat rubber box without window

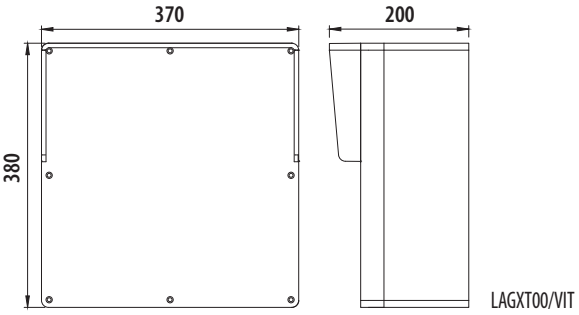

LAGXT00/VIT

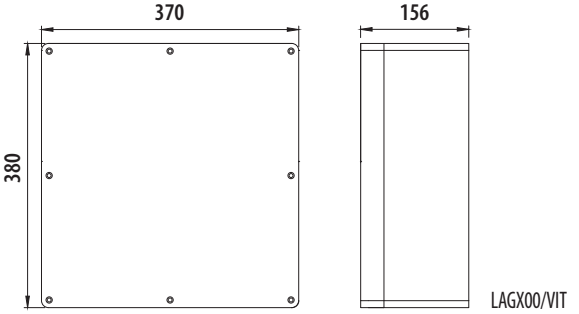

LAGX00/VIT

ACCESSORIES page 30

RETTANGOLO rubber box



Product features

Rubber box type RETTANGOLO

- Rubber box without polycarbonate window
- Glow wire test 960° Celsius according to the following standards: CEI EN60695-2-11:2014, IEC 60695-2-11:2021
- Ral 9001
- IP54-65
- Shock resistant (IK10)
- Weight: 2,0 Kgs approx

Article	Dimensions	Modules DIN	Notes
RE00GX/VIT	**450 x 130 x 83 mm (W x H x D)**	-	Handle integrated

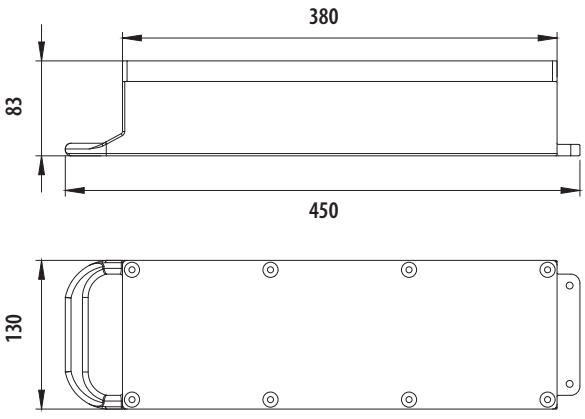

ACCESSORIES page 28

PIRAMIDE rubber box



Product features

Rubber box type PIRAMIDE

- Rubber box without polycarbonate window
- Glow wire test 960° Celsius according to the following standards: CEI EN60695-2-11:2014, IEC 60695-2-11:2021
- Ral 9001
- IP54
- Shock resistant (IK10)
- Weight: 0,5 Kg approx

Article	Dimensions	Modules DIN	Notes
PI00/VIT	130 x 100 x 130 mm (W x H x D)	-	-

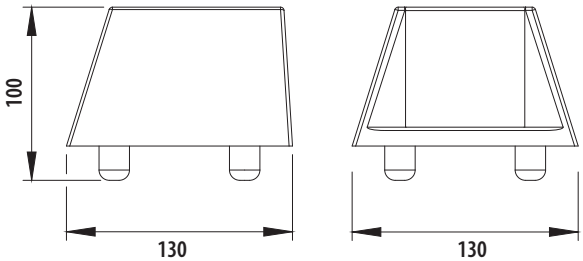

ACCESSORIES page 30

PRISMA rubber box



Product features

Rubber box type PRISMA

- Rubber box without polycarbonate window
- Glow wire test 960° Celsius according to the following standards: CEI EN60695-2-11:2014, IEC 60695-2-11:2021
- Ral 9001
- IP54
- Shock resistant (IK10)
- Weight: 1,1 Kgs approx

Article	Dimensions	Modules DIN	Notes
PR00/VIT	130 x 230 x 70 mm (W x H x D)	-	-

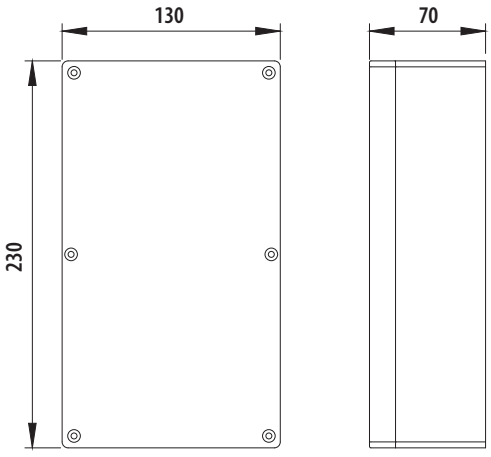

ACCESSORIES page 28

TAU rubber box



Product features

Rubber box type TAU

- Rubber box without polycarbonate window
- Glow wire test 960° Celsius according to the following standards: CEI EN60695-2-11:2014, IEC 60695-2-11:2021
- Ral 9001
- IP54-65
- Shock resistant (IK10)
- Weight: 2,5 Kgs approx

Article	Dimensions	Modules DIN	Notes
TA01	210 x 260 x 98 mm (W x H x D)	-	-

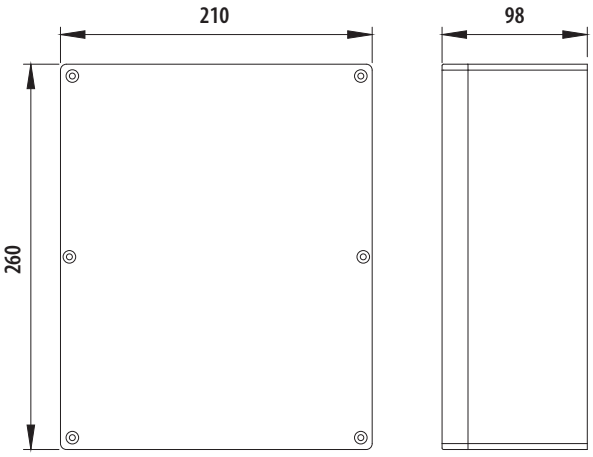

ACCESSORIES page 30

H7 rubber box



Product features

Rubber box type H7

- Rubber box suitable for n.1 horizontal polycarbonate window (18 Din modules) or n. 2 vertical polycarbonate windows 12 Din modules each.
- Glow wire test 960° Celsius according to the following standards: CEI EN60695-2-11:2014, IEC 60695-2-11:2021
- Ral 9001
- IP54-65
- Shock resistant (IK10)
- Weight: 11,0 Kgs approx

Article	Dimensions	Modules DIN	Notes
H7/VIT	400 x 289 x 275 mm (W x H x D)	-	-
H7SPS	400 x 280 x 275 mm (W x H x D)	-	-

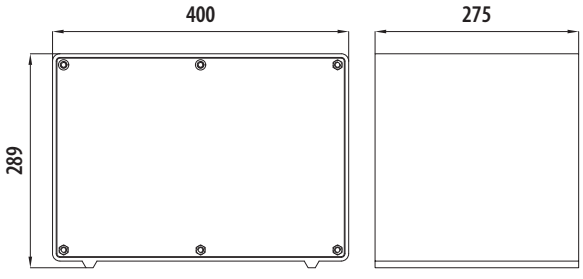

H7/VIT

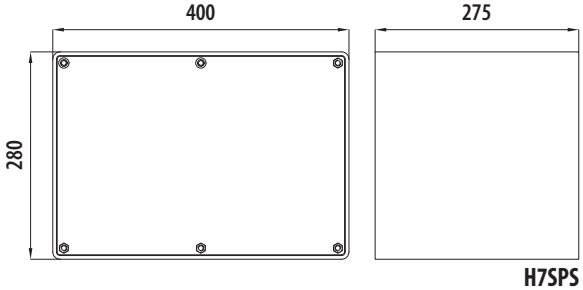

H7SPS

ACCESSORIES page 28

H10 rubber box



Product features

Rubber box type H10

- Rubber box suitable for n. 2 windows (18 Din modules each) to be ordered separately
- Rubber Feet (4 pcs) to be ordered separately (see accessories)
- Glow wire test 960° Celsius according to the following standards: CEI EN60695-2-11:2014, IEC 60695-2-11:2021
- Ral 9001
- IP54-65
- Shock resistant (IK10)
- Weight: 15,0 Kgs approx

Article	Dimensions	Modules DIN	Notes
H10N/VIT	400 x 400 x 275 mm (W x H x D)	-	-

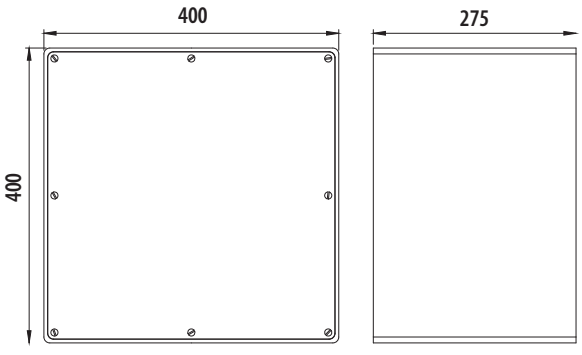

ACCESSORIES page 30

H30 rubber box



Product features

Rubber box type H30

- Rubber box suitable for n. 3 windows (18 Din modules each) to be ordered separately
- Glow wire test 960° Celsius according to the following standards: CEI EN60695-2-11:2014, IEC 60695-2-11:2021
- Ral 9001
- IP54-65
- Shock resistant (IK10)
- Weight: 20,0 Kgs approx

Article	Dimensions	Modules DIN	Notes
H30/VIT	400 x 560 x 275 mm (W x H x D)	-	-

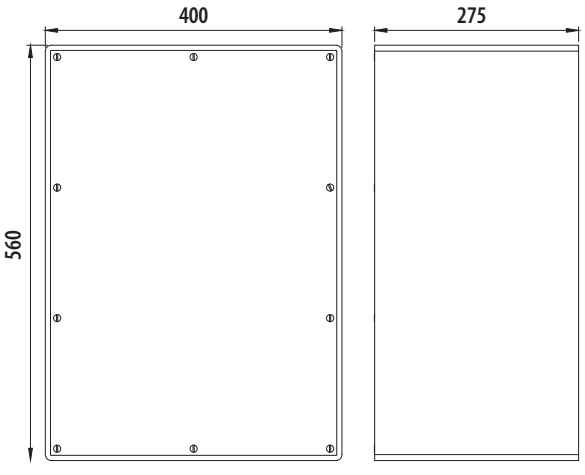

ACCESSORIES page 28

OMEGA rubber box



Product features

Rubber box type OMEGA

- Portable rubber box with window up to 10 modules. Rubber handle included.
- Glow wire test 960° Celsius according to the following standards: CEI EN60695-2-11:2014, IEC 60695-2-11:2021
- Ral 9001
- IP54-65
- Shock resistant (IK10)
- Weight: OM00M/VIT 5,1 Kgs - OM00CCM 5,0 Kgs approx

MADE IN ITALY

Article	Dimensions	Modules DIN	Notes
OM00M/VIT	270 x 230 x 270 mm (W x H x D) without handle	10	-
OM00CCM		-	Rubber box without window Rubber handle included

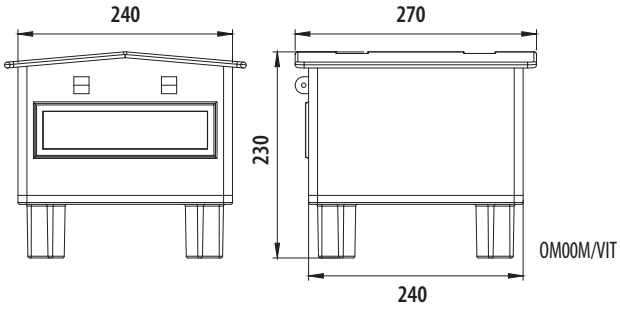

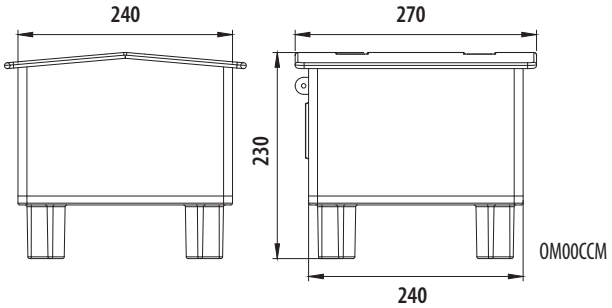

ACCESSORIES page 30

X3 rubber box





Stackability

Product features

Rubber box type X3

- Portable rubber box available with or without window up to 11 modules.
- Rubber handle included.
- Glow wire test 960° Celsius according to the following standards: CEI EN60695-2-11:2014, IEC 60695-2-11:2021
- Ral 9001
- IP54-65
- Shock resistant (IK10)
- Weight: 5,3 Kgs approx

Article	Dimensions	Modules DIN	Notes
X3M/VIT	260 x 290 x 260 mm (W x H x D) without handle	10	-
X300/VIT		-	Article without window

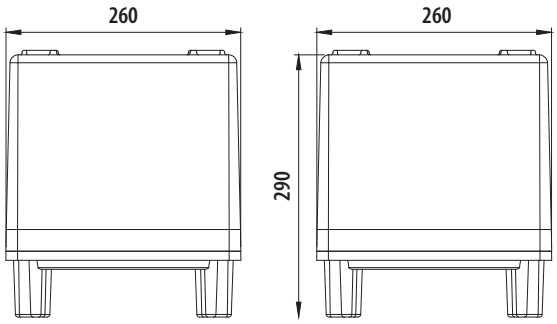

ACCESSORIES page 28

The Modulus Series

Gimax has recently enriched its range of rubber panels, always distinctive material of the company, with a new range of products in technopolymer (polyethylene) self-extinguishing compound (Glow wire test 960°C). The new material represents a valid alternative to rubber for industrial use. For example, we can suggest the use of the Modulus series in following areas:

- Television and film production
- Construction sites
- Shipyards
- Industrial Maintenance
- Defence
- Civil protection

The environments listed above are characterized by the temporary use of the power distros. In these realities, the Modulus series is particularly appreciated for its intrinsic qualities, such as stackability, lightness and easy transportability thanks to the practical handles placed at the sides of the structure allowing an easy carriage.
The available range also allows to realize the most complex configurations in terms of typology and number of receptacles.
The Modulus Series is available for portable and wall mounting solutions as well.
Obviously all Gimax products are manufactured in compliance with international safety Standards responding to the needs of extreme robustness and durability even in environments characterized by heavy uses. The typical lightness of technopolymers combined with Gimax quality makes the Modulus series an ideal partner to successfully deal with work problems in any kind of environment.

MADE IN ITALY



TECHNICAL FEATURES (PORTABLE SOLUTIONS)

Modulus Series made of LLDP

- Glow wire test 960° C according to the following standards EN60695-2-11: 2013, EN60695-2-10: 2013, CEI IEC60695-2-11: 2014, CEI IEC60695-2-10: 2014
- Test report n. 1236.0CI0030/18 carried out in Accredia Laboratory n. 0086
- Ral 9001
- Degree of protection not lower than IP65, shock resistant (IK10)
- Weight of the empty enclosures (including front-back panels):
  Modulus XS 5.5 Kg
  Modulus S 8.5 Kg
  Modulus M 14.6 Kg
  Modulus L 16.0 Kg
- Front and back panels made of PVC with V0 self-extinguishing grade according to UL94
- Carrying handles integrated in the enclosure structure
- Self-adhesive perimeter gasket with a special frame to guarantee longitudinal deformation and maintain the degree of protection (IP) unaltered in time
- High thickness PVC cover with self-extinguishing degree according to UL94 standard index V-0, DIN 4102 B1
- Long thread closing screws with Torx Plus head
- The model Modulus XS and S have one cover, the models M and L have two covers each for manufacturing by CNC machines
- Custom solutions available on demand

A special foot print makes each box stackable with obvious advantages for storage and carriage.
Matrix stackability:

Model	Modulus XS	Modulus S	Modulus M	Modulus L
Modulus XS	X	-	-	-
Modulus S	-	X	X	-
Modulus M	-	X	X	-
Modulus L	-	-	-	X



STACKABILITY



INTEGRATED HANDLE



RECESSED PANELS (side protection)

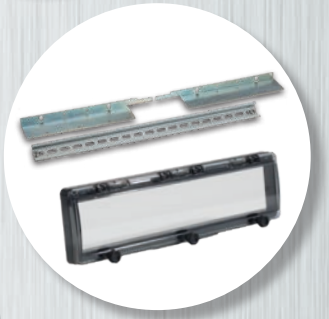

ACCESSORIES AVAILABLE



SIDE CUT VERSION



Product features

Modulus Series made of LLDP

- Glow wire test 960° Celsius according to the following standards: CEI EN60695-2-11:2014, IEC 60695-2-11:2021
- Test report n. 1236.0CI0030/18 carried out in Accredia Laboratory n. 0086
- Ral 9001
- IP65-IP67, shock resistant (IK10)
- Carrying handles integrated in the enclosure structure
- Suitable to mount up to n. 2 hinged lids (max 36 ways)
- Self-adhesive perimeter gasket with a special frame to guarantee longitudinal deformation and maintain the degree of protection (IP) unaltered in time
- High thickness PVC cover (removadle) with self-extinguishing degree according to UL94 standard index V-0, DIN 4102 B1
- Long thread closing screws with Torx Plus head

The product is available in two versions.

- Version 1 – Closed perimeter, like the Modulus S, M, L models.
- Version 2 – Optimized-geometry perimeter that allows installation of CEE connectors up to 63A 5P (feed-through), by rotating the fixed power plug 90°. This solution makes maximum use of the front panel, allowing a greater number of sockets to be installed.

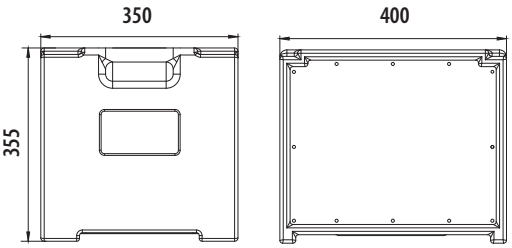

ACCESSORIES page 30



Article	Dimensions	Stackability	Notes
MODULUS XS 0	**400 x 355 x 350 mm (W x H x D)**	**Model XS**	Poliethylene box without window but **with side cut**
MODULUS XS C	**400 x 355 x 350 mm (W x H x D)**	**Model XS**	Poliethylene box **without side cut**, without window

Weight (Including front panel) 5.3 Kgs approx



Article	Dimensions	Stackability	Notes
MODULUS XS 01W	**400 x 355 x 350 mm (W x H x D)**	**Model XS**	Poliethylene box **with side cut** and 1 window 18 ways
MODULUS XS C1W	**400 x 355 x 350 mm (W x H x D)**	**Model XS**	Poliethylene box **without side cut** and 1 window 18 ways

Weight (Including front panel) 5.3 Kgs approx



Article	Dimensions	Stackability	Notes
MODULUS XS 02W	**400 x 355 x 350 mm (W x H x D)**	**Model XS**	Poliethylene box **with side cut** and 2 windows 18 ways
MODULUS XS C2W	**400 x 355 x 350 mm (W x H x D)**	**Model XS**	Poliethylene box **without side cut** and 2 windows 18 ways

Weight (Including front panel) 5.3 Kgs approx



Product features

Modulus Series made of LLDP

- Glow wire test 960° Celsius according to the following standards: CEI EN60695-2-11:2014, IEC 60695-2-11:2021
- Test report n. 1236.0CI0030/18 carried out in Accredia Laboratory n. 0086
- Ral 9001
- IP65, shock resistant (IK10)
- Carrying handles integrated in the enclosure structure
- Suitable to mount up to n. 2 hinged lids (max 36 ways)
- Self-adhesive perimeter gasket with a special frame to guarantee longitudinal deformation and maintain the degree of protection (IP) unaltered in time
- High thickness PVC cover (removadle) with self-extinguishing degree according to UL94 standard index V-0, DIN 4102 B1
- Long thread closing screws with Torx Plus head

MADE IN ITALY

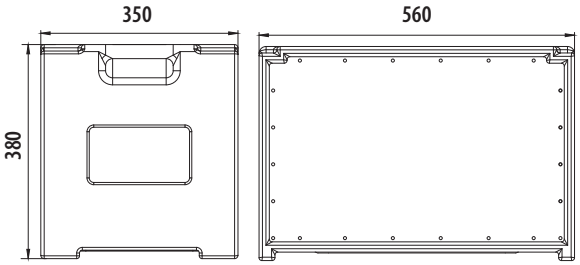

ACCESSORIES page 30



Article	Dimensions	Stackability	Notes
MODULUS S	**560 x 380 x 350 mm (W x H x D)**	**Model S and Model M**	Poliethylene box without window

Weight (Including front panel) 8.5 Kgs approx



Article	Dimensions	Stackability	Notes
MODULUS S1W	**560 x 380 x 350 mm (W x H x D)**	**Model S and Model M**	Poliethylene box with Din rail and hinged lid 18 modules

Weight (Including front panel) 9.0 Kgs approx



Article	Dimensions	Stackability	Notes
MODULUS S2W	**560 x 380 x 350 mm (W x H x D)**	**Model S and Model M**	Poliethylene box with Din rails and hinged lids 36 modules

Weight (Including front panel) 9.2 Kgs approx



Product features

Modulus Series made of LLDP

- Glow wire test 960° Celsius according to the following standards: CEI EN60695-2-11:2014, IEC 60695-2-11:2021
- Test report n. 1236.0CI0030/18 carried out in Accredia Laboratory n. 0086
- Ral 9001
- IP65, shock resistant (IK10)
- Carrying handles integrated in the enclosure structure
- Suitable to mount up to n. 3 hinged lids (max 54 ways)
- Self-adhesive perimeter gasket with a special frame to guarantee longitudinal deformation and maintain the degree of protection (IP) unaltered in time
- High thickness PVC covers (removable) with self-extinguishing degree according to UL94 standard index V-0, DIN 4102 B1
- Long thread closing screws with Torx Plus head

MADE IN ITALY

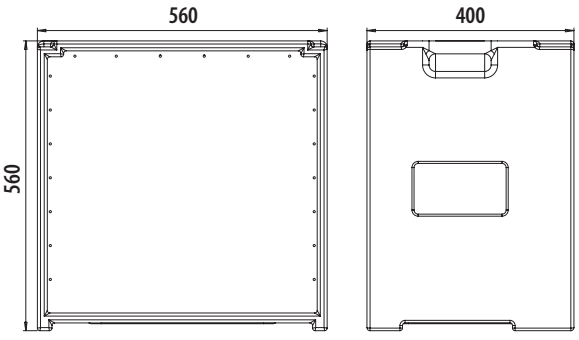

ACCESSORIES page 30



Article	Dimensions	Stackability	Notes
MODULUS M	**560 x 560 x 400 mm (W x H x D)**	**Model S and Model M**	Poliethylene box without window

Weight (Including closing panels) 14.6 Kgs approx



Article	Dimensions	Stackability	Notes
MODULUS M2W	**560 x 560 x 400 mm (W x H x D)**	**Model S and Model M**	Poliethylene box with Din rails and hinged lids 36 modules

Weight (Including closing panels) 15.1 Kgs approx



Article	Dimensions	Stackability	Notes
MODULUS M3W	**560 x 560 x 400 mm (W x H x D)**	**Model S and Model M**	Poliethylene box with Din rails and hinged lids 54 modules

Weight (Including closing panels) 15.3 Kgs approx

Series MODULUS L



Product features

Modulus Series made of LLDP

- Glow wire test 960° Celsius according to the following standards: CEI EN60695-2-11:2014, IEC 60695-2-11:2021
- Test report n. 1236.0CI0030/18 carried out in Accredia Laboratory n. 0086
- Ral 9001
- IP65, shock resistant (IK10)
- Carrying handles integrated in the enclosure structure
- Suitable to mount up to n. 3 hinged lids (max 54 ways)
- Self-adhesive perimeter gasket with a special frame to guarantee longitudinal deformation and maintain the degree of protection (IP) unaltered in time
- High thickness PVC covers (removable) with self-extinguishing degree according to UL94 standard index V-0, DIN 4102 B1
- Long thread closing screws with Torx Plus head

MADE IN ITALY

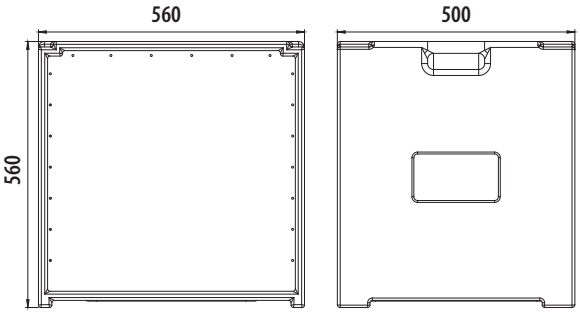

ACCESSORIES page 30

GIMAX



Article	Dimensions	Stackability	Notes
MODULUS L	**560 x 560 x 500 mm (W x H x D)**	**Model L**	Poliethylene box without window

Weight (Including closing panels) 16.0 Kgs approx



Article	Dimensions	Stackability	Notes
MODULUS L2W	**560 x 560 x 500 mm (W x H x D)**	**Model L**	Poliethylene box with Din rails and hinged lids 36 modules

Weight (Including closing panels) 16.5 Kgs approx



Article	Dimensions	Stackability	Notes
MODULUS L3W	**560 x 560 x 500 mm (W x H x D)**	**Model L**	Poliethylene box with Din rails and hinged lids 54 modules

Weight (Including closing panels) 16.7 Kgs approx

Series MODULUS K (WALL MOUNTING)



Product features

Modulus Series made of LLDP

- Glow wire test 960° Celsius according to the following standards: CEI EN60695-2-11:2014, IEC 60695-2-11:2021
- Test report n. 1236.0CI0030/18 carried out in Accredia Laboratory n. 0086
- Ral 9001
- IP65, shock resistant (IK10)
- Lightweight
- Carrying handles available
- Self-adhesive perimeter gasket with a special frame to guarantee longitudinal deformation and maintain the degree of protection (IP) unaltered in time
- High thickness PVC cover with self-extinguishing degree according to UL94 standard index V-0, DIN 4102 B1
- Long thread closing screws with Torx Plus head

MADE IN ITALY

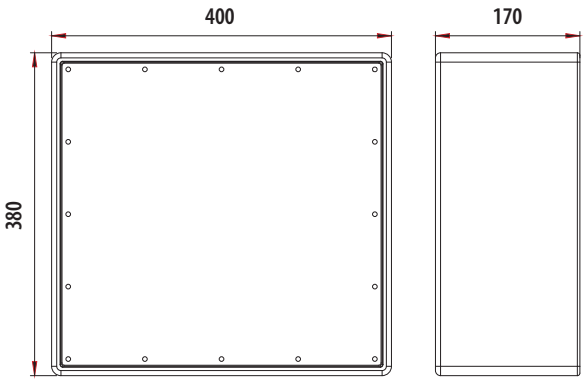

ACCESSORIES page 30



Article	Dimensions	Note
K1300T	320 x 380 x 170 mm (W x H x D)	Poliethylene box without window Weight 2.0 Kgs approx
K131WT		Poliethylene box with with Din rail hinged lid 13 modules Weight 2.4 Kgs approx

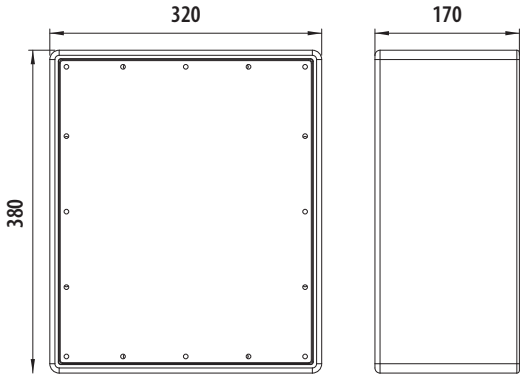



Article	Dimensions	Note
K1800T	400 x 380 x 170 mm (W x H x D)	Poliethylene box without window Weight 3.5 Kgs approx
K181WT		Poliethylene box with Din rail hinged lid 18 modules Weight 3.9 Kgs approx

Series MODULUS K (WALL MOUNTING)



Product features

Modulus Series made of LLDP

- Glow wire test 960° Celsius according to the following standards: CEI EN60695-2-11:2014, IEC 60695-2-11:2021
- Test report n. 1236.0CI0030/18 carried out in Accredia Laboratory n. 0086
- Ral 9001
- IP65, shock resistant (IK10)
- Lightweight
- Carrying handles available
- Self-adhesive perimeter gasket with a special frame to guarantee longitudinal deformation and maintain the degree of protection (IP) unaltered in time
- High thickness PVC cover with self-extinguishing degree according to UL94 standard index V-0, DIN 4102 B1
- Long thread closing screws with Torx Plus head

MADE IN ITALY

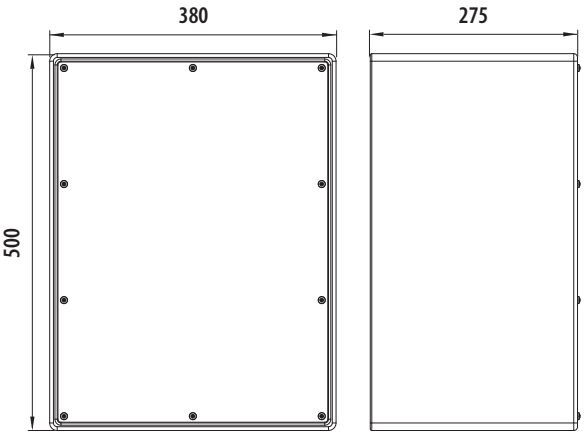

ACCESSORIES page 30



Article	Dimensions	Note
MODULUS54	**500 x 380 x 275 mm (W x H x D)**	Poliethylene box without window Weight 5.2 Kgs approx
MODULUS541W		Poliethylene box with Din rail hinged lid 18 modules Weight 5.7 Kgs approx



Article	Dimensions	Note
MODULUS542W	**500 x 380 x 275 mm (W x H x D)**	Poliethylene box with Din rails and 2 hinged lids 18 modules each Weight 5.9 Kgs approx



Article	Dimensions	Note
MODULUS543W	**500 x 380 x 275 mm (W x H x D)**	Poliethylene box with Din rails and 3 hinged lids 18 modules each Weight 6.1 Kgs approx

Accessories for Modulus Series



Brackets and hinged lids

Article	Suitable for	Kit content
BRAMODXS	**Modulus XS**	n. 8 self threading screws 4,2x13 n. 4 nuts M6 and 4 bolts M6x10 n. 1 left bracket and n. 1 right bracket n. 2 Din rails (360 mm each)
BRAMODS	**Modulus S**	n. 8 self threading screws 4,2x13 n. 4 nuts M6 and 4 bolts M6x10 n. 1 left bracket and n. 1 right bracket n. 2 Din rails (470 mm each)
BRAMODML	**Modulus M-L**	n. 14 self threading screws 4,2x13 n. 6 nuts M6 and 4 bolts M6x10 n. 1 left bracket and n. 1 right bracket n. 3 Din rails (470 mm each)

Article	Structure	Suitable for	Note
SKATE S **SKATE M** **SKATE L**	**Wood**	**Modulus S*** **Modulus M*** **Modulus L***	**N. 2 pivoting wheels and N. 2 wheels with brakes**

* See drawings below

Modulus S

380 x 560 x 350 mm

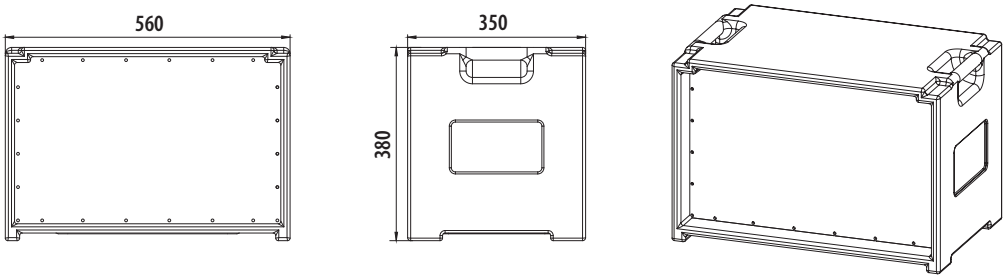

Modulus M

560 x 560 x 400 mm

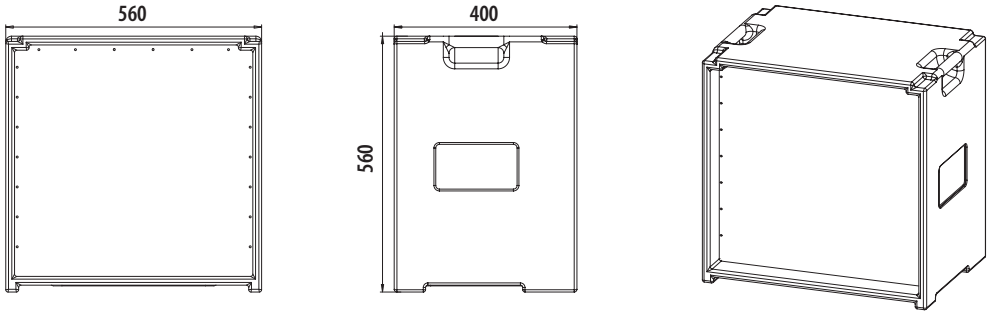

Modulus L

560 x 560 x 500 mm

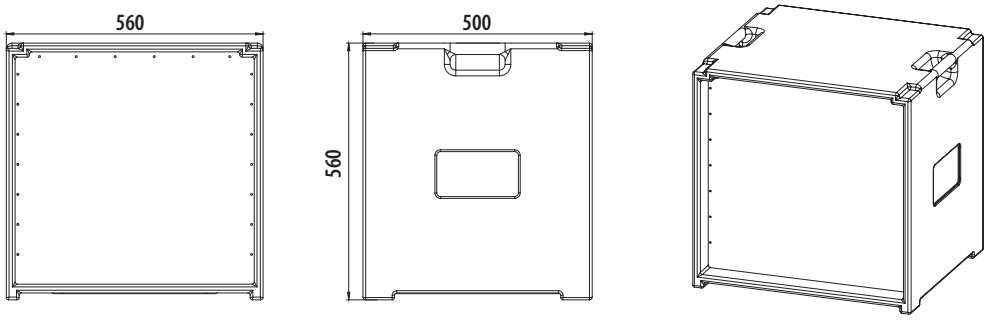

Accessories



Article	Description	Dimensions
COP18M/GX65	Hinged lid 18 modules	346 x 93 x 26 mm (W x H x D)



Article	Description	Dimensions
COP12M/GX65	Hinged lid 12 modules	236 x 93 x 26 mm (W x H x D)



Article	Description	Dimensions
COP2M	Hinged lid 2 modules	50 x 78 x 27 mm (W x H x D)



Article	Description	Dimensions
GRGOR/99	Rubber grating with filter net	99 x 99 x 18 mm (W x H x D)
GRGOR/120	Rubber grating with filter net	120 x 120 x 18 mm (W x H x D)

Accessories



Article	Description	Dimensions
MAG00	Rubber handle	135 x 47 x 30 mm (W x H x D)
MAG02	Rubber handle reinforced with metal insert for heavy load	135 x 47 x 30 mm (W x H x D)



Article	Description	Dimensions
MAG07	Rubber big handle	176 x 61 x 39 mm (W x H x D)
MAG08	Rubber handle reinforced with metal insert for heavy load	176 x 61 x 39 mm (W x H x D)



Article	Description	Dimensions
VBK4X18F81	Anti-loss Inox screws for rubber boxes type: Rettangolo, Prisma and Tau	M4 x 18
VBK4X18F812	Anti-loss Inox screws for rubber boxes type: Sigma, Delta, Lambda	M4 x 18
005S/5	Front knob to lock the polycarbonate windows (10 and 12 modulus)	M4 x 13,5
VBC8X16I6	6 Inox Allen screws for rubber boxes type H7	M8 x 16
VBC8X20I8	8 Inox Allen screws for rubber boxes type H10	M8 x 20
VBC8X20I10	10 Inox Allen screws for rubber boxes type H30	M10 x 20

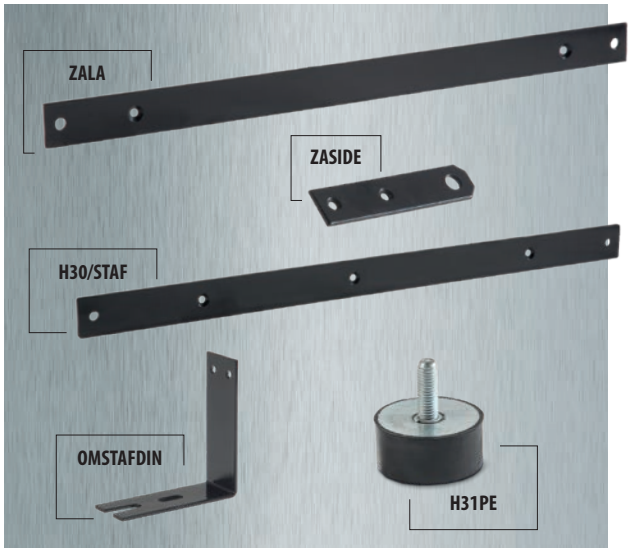

Article	Description
ZALA/2	N. 2 wall brackets for Lambda enclosure
ZASIDE4	N. 4 wall brackets for Sigma and Delta enclosures
H30/STAF2	N. 2 wall brackets for H30 enclosure
OMSTAFDIN	Internal bracket for DIN rail Omega enclosure
H31PE4	N. 4 feet for H30 and H10 enclosures provided of washers and nuts

DIN rail and brackets assembling

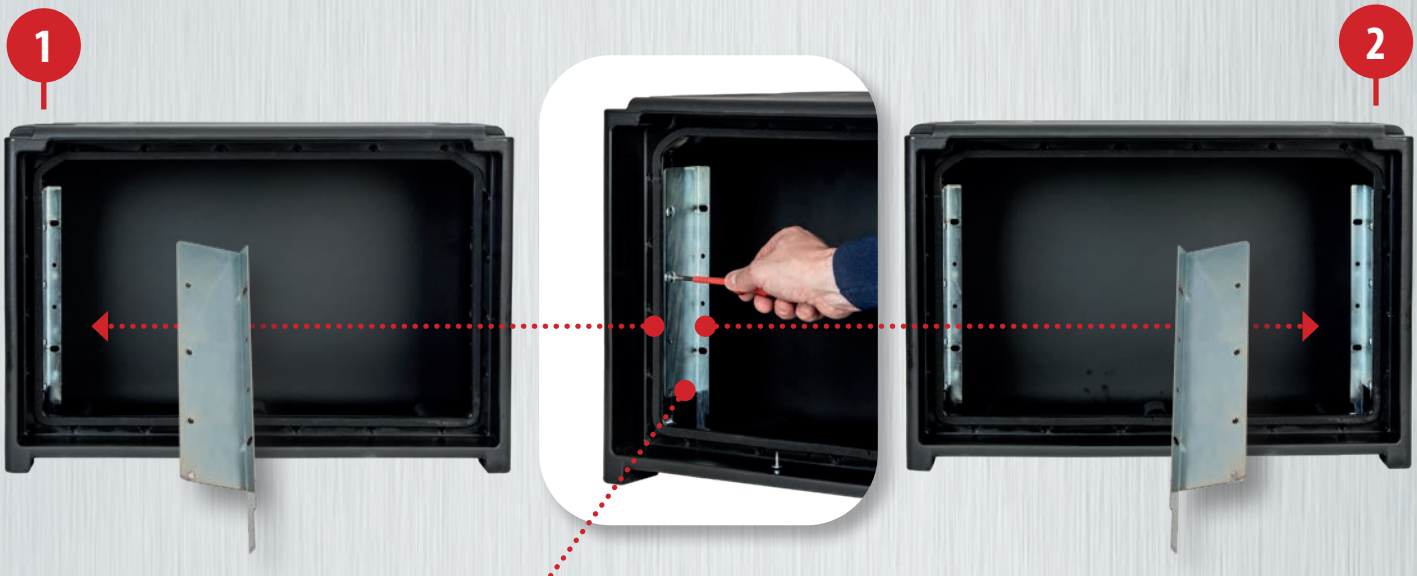



Details of the brackets assembling

Place the brackets edge as in picture then screw it using the self threading screws 4,2x13

Place the Din rail using the nuts and bolts M6x10





Further literature available

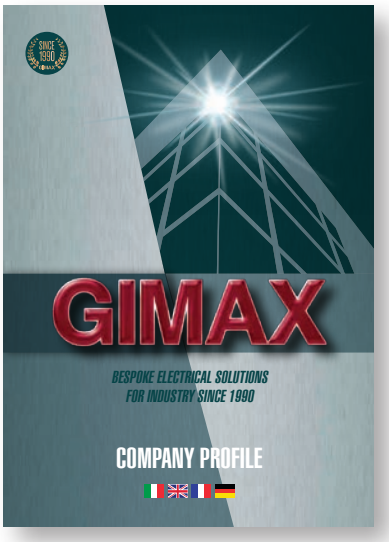

COMPANY PROFILE

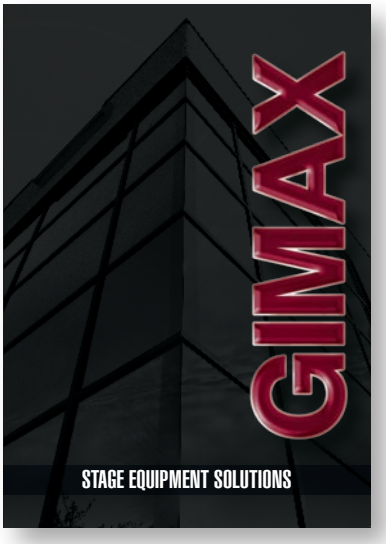

STAGE EQUIPMENT SOLUTIONS



MACHINERY LIGHTING



WALL MOUNTING AND PORTABLE RUBBER COMBINATIONS



LED LAMP SERIES GXL



FLASHLIGHTS

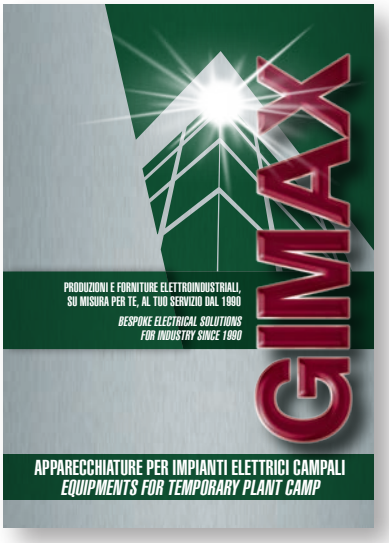

EQUIPMENTS FOR TEMPORARY PLANT CAMP

"We hope that you have found the best solution for your needs amongst our various proposals in this catalogue.

We are proud to underline that our main force, that has made our Company grow these years, is the design and realisation within our company of all our products, starting from the necessities of our clients.

In case you have not found a product that suits your needs, our offices are at your disposal to assist you in finding the best possible solution.

Contact our commercial and technical department at the following number: 0039 (0)584 81743 and test our competence and professionalism."

Thank you and...

...See you soon

The Gimax Team



Via dell'Arabescato, snc
Zona Industriale Portone - 55045 Pietrasanta (LU) - Italy
Tel. +39 (0) 584 81742/3 - Fax +39 (0) 584 81744
www.gimaxsrl.it - info@gimaxsrl.it

© Gimax 10BF